ALICE MIRROR DYNAMIC/TUNABLE WHITE

24VDC HUMAN CENTRIC LIGHTING

DESIGNED BY GREGORY KAY | ASSEMBLED IN AMERICA

REV.12.18.19

4000K ← 3000K → 2000K

FRONT VIEW

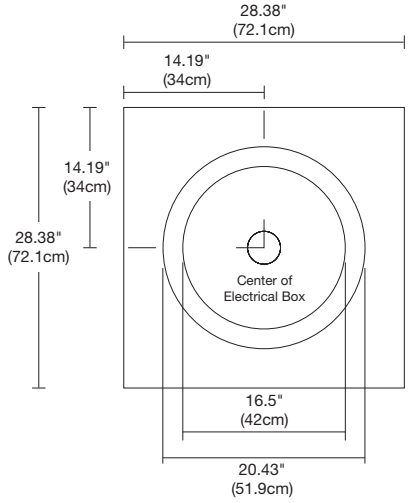

SIDE VIEW

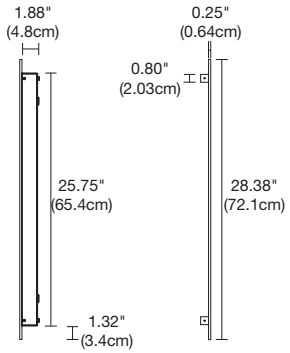

Description:
Alice Dynamic White / Tunable White LED surface mounted mirror features Tunable White (Human Centric Lighting) technology. With a color-tuning range of 2000K-4000K, LEDs are set behind a round inset of frosted glass, projecting an even glow of Tunable White Light. This lets the end user see themselves in a perfect customizable light. The Alice Dynamic/Tunable White LED Mirror brings together the latest advancement in both luxury and technology. 5 year pro-rated warranty.

Dimmers: (Dimmers Sold Separately)
ELV Dual Dimming
0-10V Dual Dimming
TRIAC: S2-L Single Pole Dimming
DMX: CDMX-2XK-WH Single Pole Dimming

Accessories:
Add Mirror Defogger **DF-RD15** to remove condensation (sold separately)

Dimensions:
28.38” x 28.38” x 2.13”

Input Voltage:
120 VAC

Diffuser:
Frosted Glass

Average Lamp Life:
50,000 hours

Body Finish:
Mirror

Weight:
28 lbs (12.7 kg)

		Size		Lamp		Control		Color Temperature
ALICE	–	**28**	–	**LED**	–	**2UNI**	–	**2K4K**

ALICE Alice

28 28"

LED LED

DMX DMX With Power Supply (Dimmers and controllers Sold Separately see pg 4)

2UNI 2 Universal Power Supplies Included in Mirror, Requires Dual ELV Dimmers, Dual 0-10V Dimmers or Single Pole TRIAC Lutron S2-L Skylark Dimmer. (Sold Separately)

2k4k 2000k - 4000k Dynamic / Tunable White LED technology

PROJECT		FIXTURE TYPE		DATE	

Wiring Diagram: Dual Uni Drivers Lutron Skylark S2-L Dimmer

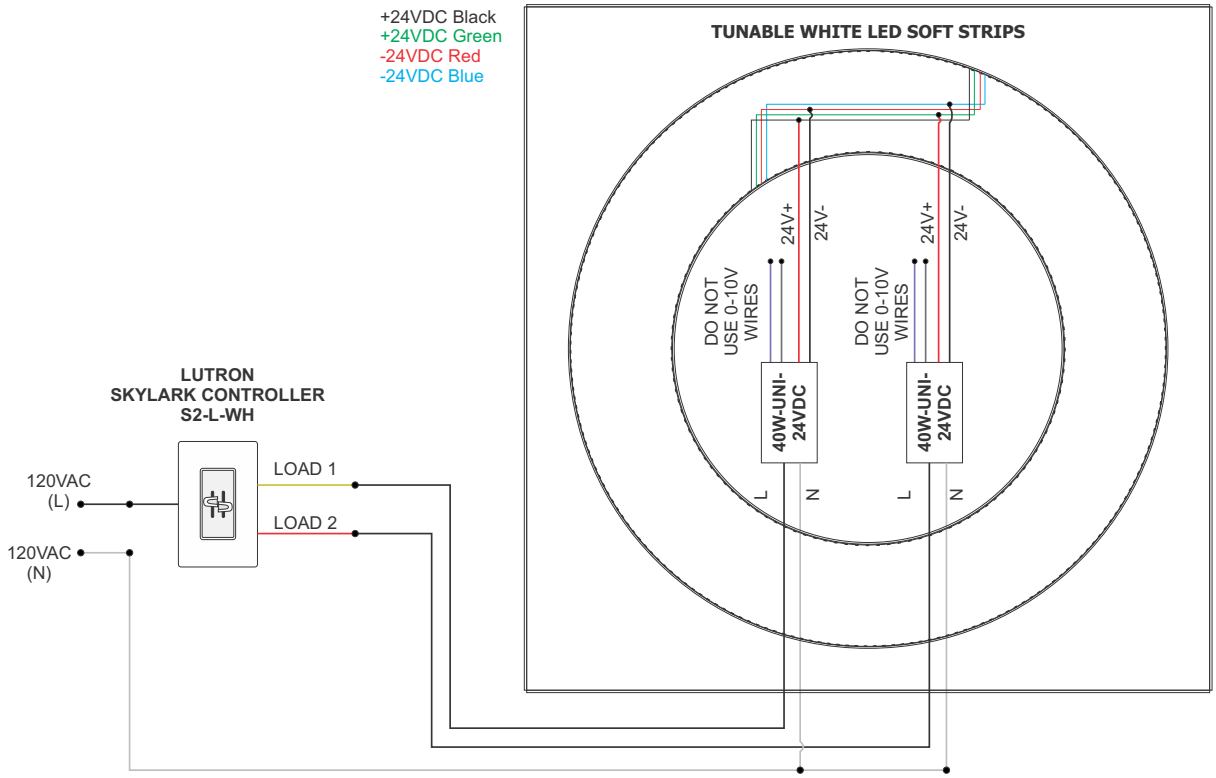

Wiring Diagram: Dual Uni Drivers Dual ELV Dimmers

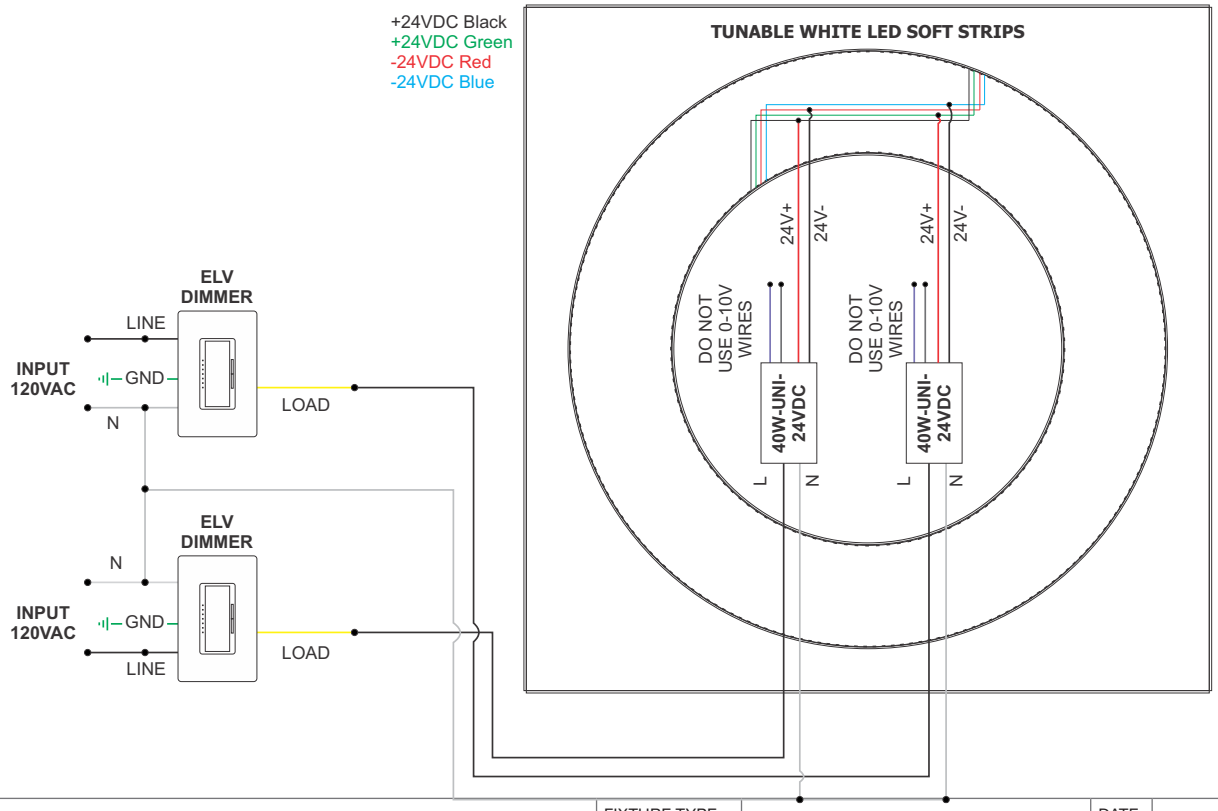

PROJECT		FIXTURE TYPE		DATE	

Wiring Diagram: Dual Uni Drivers Dual 010 Dimmers

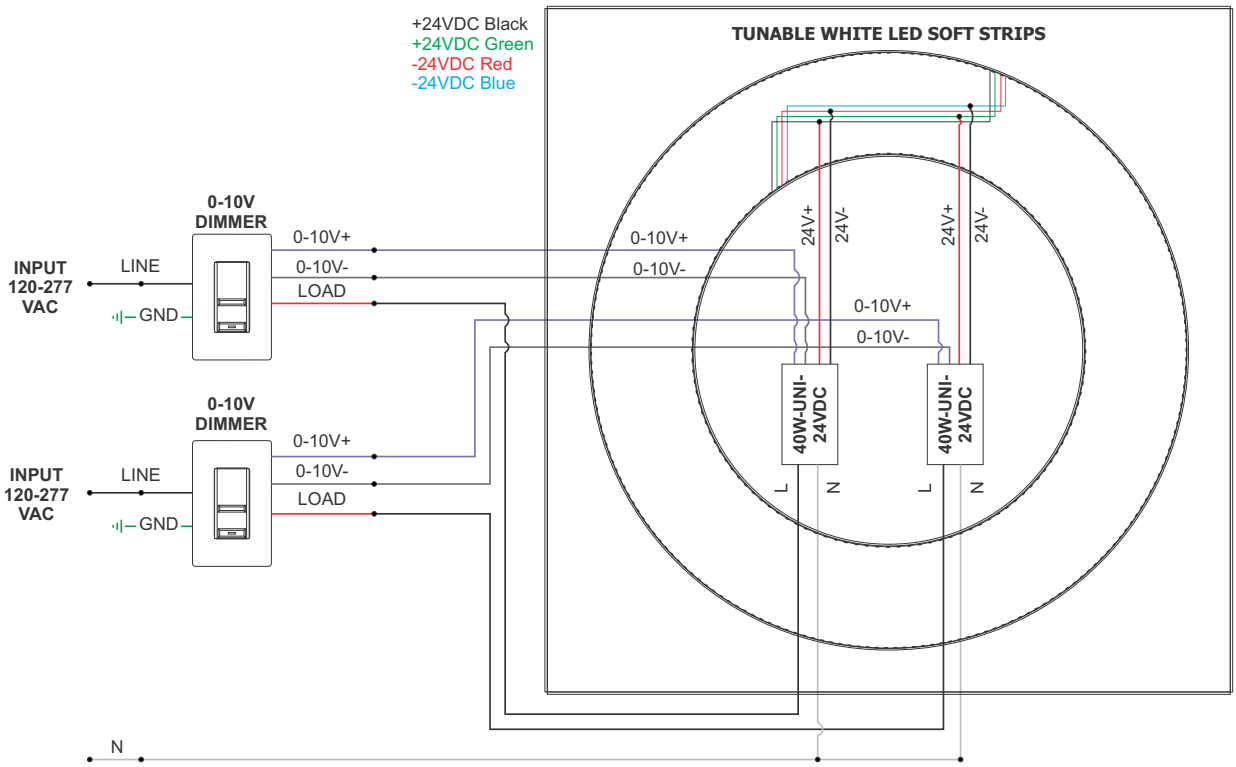

PROJECT		FIXTURE TYPE		DATE	

ALICE MIRROR DYNAMIC/TUNABLE WHITE

24VDC HUMAN CENTRIC LIGHTING

DESIGNED BY GREGORY KAY | ASSEMBLED IN AMERICA

REV.12.18.19

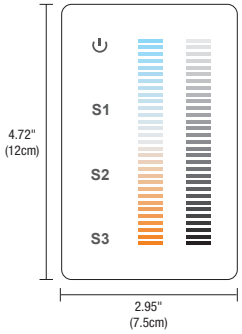

DESCRIPTION

The Dynamic White / Tunable White Touch Controller is a full-touch controller that offers fast and accurate color temperature adjustment and independent brightness dimming of a single zone. Designed for Tunable White and Dual-Color LED installations, this controller adjusts color temperature and brightness for warm and cool white LEDs. It also saves three preset scenes. Independent smooth dimming with a 256 level brightness adjustment enables the DMX controller to achieve many colors within the full LED spectrum. Controller includes a Power Adapter that fits in Junction Box (not included) behind the controller. It contains an illuminated back light when powered off.

DIMENSIONS:

Control Interface - 4.72" x 2.95"
Total Depth W/faceplate - 2.91"
J-Box Height - 3.87"

APPLICATIONS

Indoor

INSTALLATION

Fits in a single gang 2.5" deep Junction Box, not to be used with a Multi-Gang Box

POWER INPUT

120/277VAC

COMPATIBLE POWER SUPPLIES (INCLUDED)

PSB-100W-24VDC-2XK 100W output, 120/277V Input (12.2" wide x 6.5" high x 2.2" deep)

OUTPUT SIGNAL

USITT DMX 512 (1990)

Product		Type		Finish
CDMX1	–	2XK	–	WH
CDMX1 DMX 1 Zone Touch Controller		2XK 2-Color		WH White

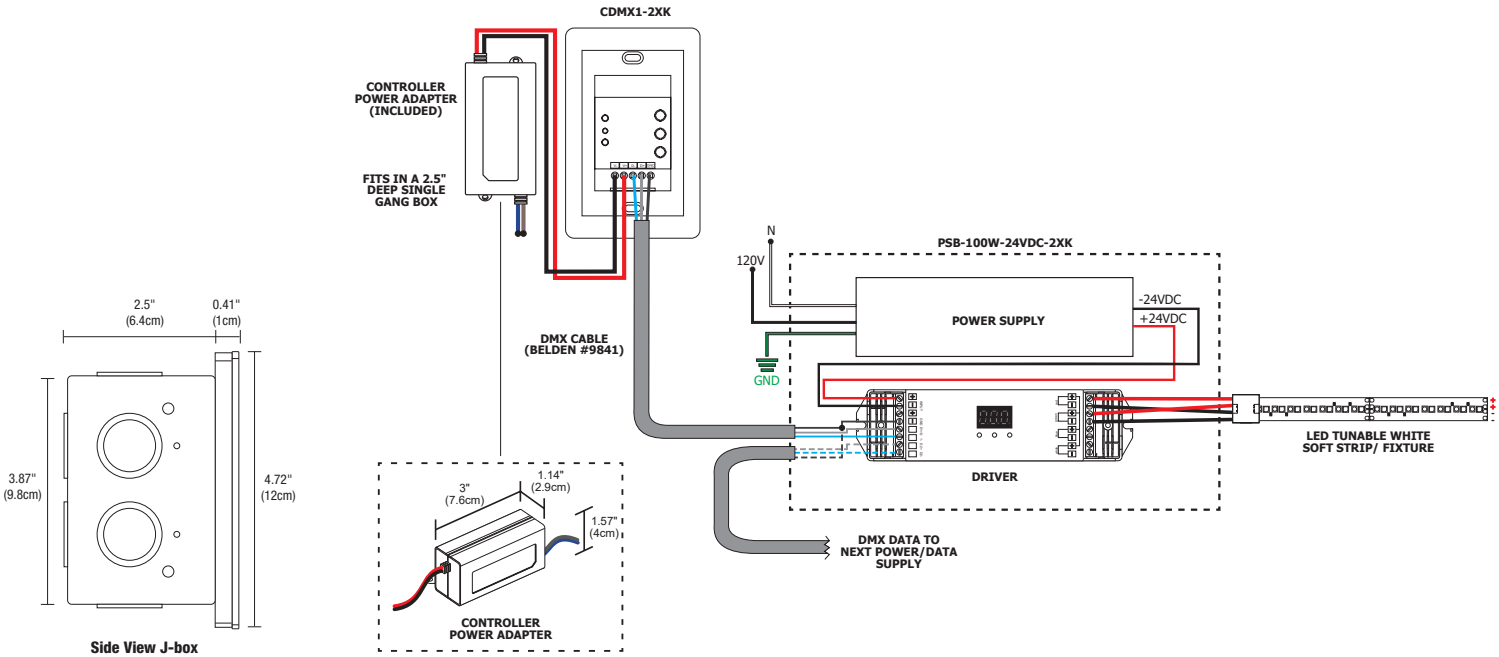

PROJECT		FIXTURE TYPE		DATE	

TM-30-15 DATA

The data below is for SS5C bare LED Soft Strips. Consistent color temperatures throughout a single strip and among multiple strips is possible through a 3 phase binning process in which each order is inspected with a color meter to ensure uniformity.

2000K ONLY (2K4K) | Rf: 84.3 | Rg: 96.9

Color Vector Graphic

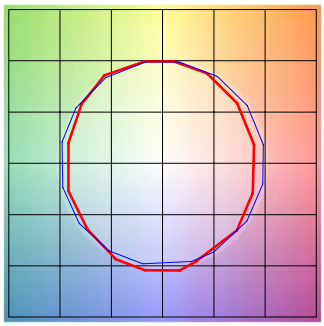

Test Reference

		GRAPHIC SHIFTS %	
HUE BIN	Rf	CHROMA	HUE
1	80.3	-8.9%	1.7%
2	79.7	-7.0%	7.8%
3	78.9	-2.9%	10.0%
4	89.5	-0.5%	5.1%
5	94.4	0.7%	1.7%
6	92.1	2.4%	-0.3%
7	89.4	-2.4%	-5.9%
8	89.7	-6.4%	-0.2%
9	86.0	-4.9%	4.6%
10	81.8	-3.4%	9.3%
11	83.1	3.3%	9.7%
12	85.8	5.6%	3.3%
13	85.6	6.2%	-12.8%
14	61.7	-1.9%	-19.0%
15	79.7	-3.3%	-12.9%
16	78.1	-7.9%	-10.6%

4000K ONLY (2K4K) | Rf: 89.6 | Rg: 99.1

Color Vector Graphic

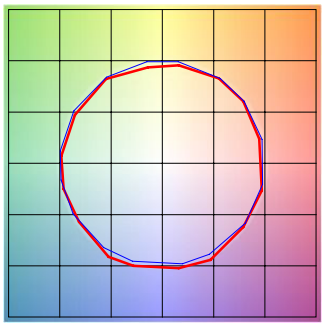

Test Reference

		GRAPHIC SHIFTS %	
HUE BIN	Rf	CHROMA	HUE
1	91.3	-2.5%	1.0%
2	95.3	-0.5%	0.5%
3	94.3	-0.7%	1.1%
4	91.1	-3.4%	-1.1%
5	89.5	-5.6%	0.0%
6	94.6	-1.4%	1.3%
7	93.2	-3.0%	2.6%
8	91.3	-1.8%	4.6%
9	86.5	-0.9%	9.1%
10	83.3	-0.5%	9.5%
11	83.3	4.9%	9.0%
12	89.7	4.1%	1.7%
13	90.1	3.6%	-4.3%
14	93.4	5.2%	-2.1%
15	87.4	0.4%	-4.3%
16	86.6	0.4%	-6.1%

2K4K (3000K) | Rf: 90.2 | Rg: 101.4

Color Vector Graphic

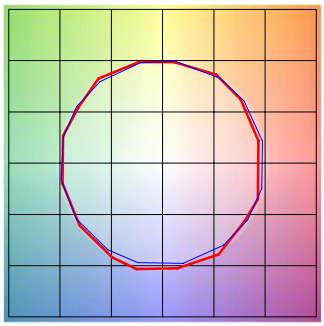

Test Reference

		GRAPHIC SHIFTS %	
HUE BIN	Rf	CHROMA	HUE
1	90.9	-3.8%	1.3%
2	91.7	-1.9%	3.3%
3	88.7	0.7%	5.1%
4	92.4	-1.0%	0.7%
5	92.9	0.9%	1.7%
6	93.1	3.3%	-0.6%
7	91.0	-1.8%	-0.4%
8	97.0	0.2%	-1.1%
9	92.8	-0.5%	3.6%
10	88.3	1.0%	7.0%
11	87.1	3.8%	7.8%
12	87.6	6.5%	-0.3%
13	89.3	3.6%	-6.3%
14	86.1	4.5%	-9.1%
15	91.6	-1.9%	-3.1%
16	83.8	-1.5%	-11.2%

PROJECT		FIXTURE TYPE		DATE	