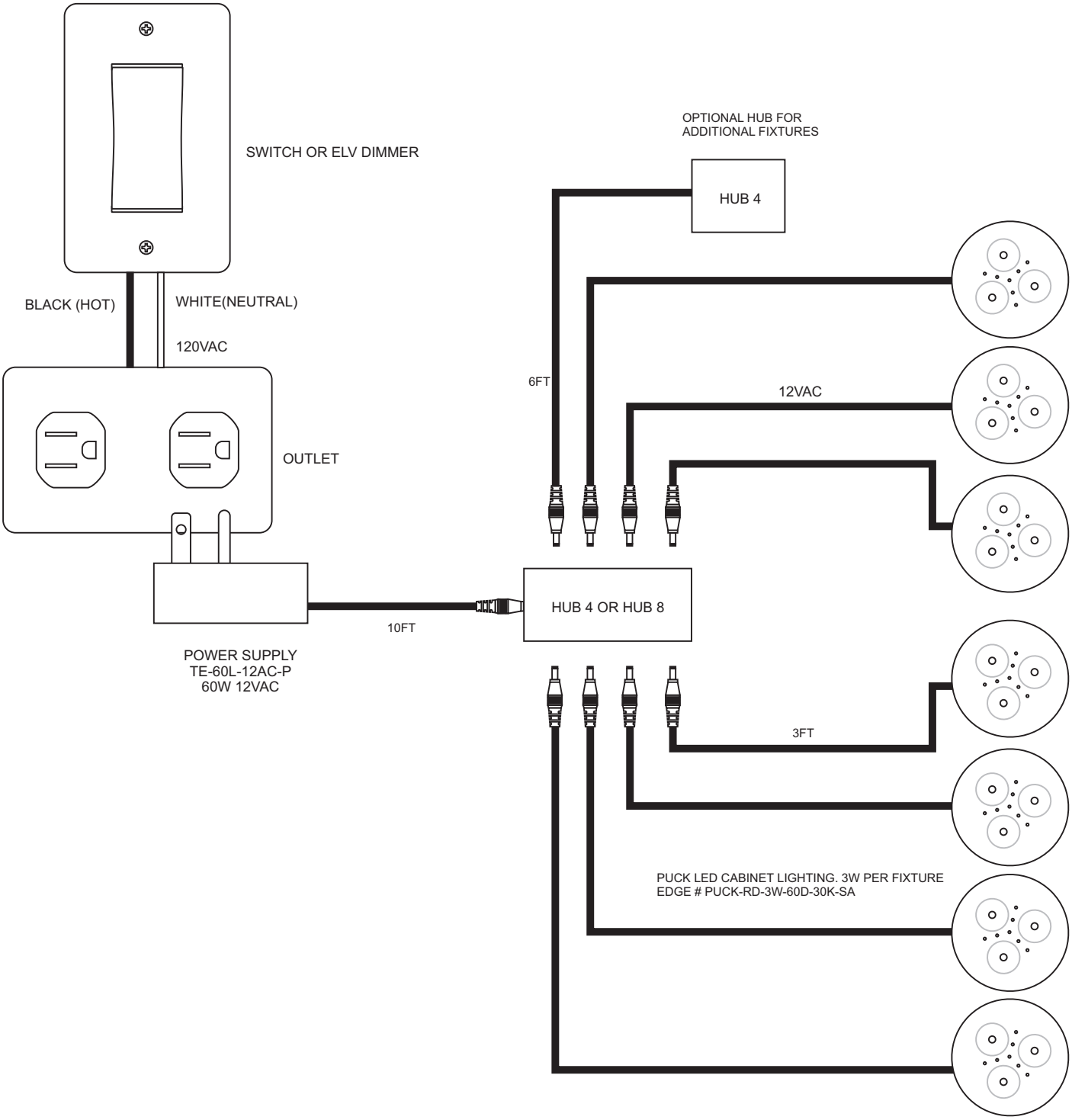
SWITCH OR ELV DIMMER
BLACK (HOT)
WHITE(NEUTRAL)
120VAC
OUTLET
POWER SUPPLY
TE-60L-12AC-P
60W 12VAC
10FT
HUB 4 OR HUB 8
OPTIONAL HUB FOR
ADDITIONAL FIXTURES
HUB 4
6FT
12VAC
3FT
PUCK LED CABINET LIGHTING. 3W PER FIXTURE
EDGE # PUCK-RD-3W-60D-30K-SA