1718 W. Fullerton Chicago, IL 60614
Ph: 773.770.1195 ● Fax: 773.935.5613
www.PureEdgeLighting.com ● info@PureEdgeLighting.com
© 2016 PureEdge Lighting. All Rights Reserved.

Installation Instructions for **Pure Smart PSBB Power Supply 96W 24VDC, Wi-Fi, Connected by WiZ Pro, Static White**

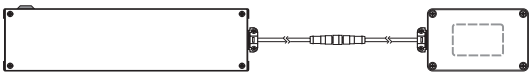

REMOTE POWER SUPPLY ENCLOSURE

BRIDGEBOX JUNCTION BOX WITH WiZ PRO UR BRIDGEBOX

SAVE THESE INSTRUCTIONS!

GENERAL INFORMATION

- **RISK OF FIRE:** This product must be installed by a qualified electrician. Turn the power to the electrical box off during installation. Read the "Important Safety Instructions" before installation.

- **NOTE:** To avoid overheating the power supply, install it in a ventilated remote location where air flows. Maintain proper spacing among power supplies when multiple power supplies are installed in the same remote location.

- This product is not suitable for wet locations. It is approved for the use at any height above the finished floor.

- A typical installation is shown. Specific installation must be in accordance with the local electrical codes.

- **TO REDUCE RISK OF FIRE,** it is important to wire the power supply for the system as described in this installation instruction.

- Load the power supply to **MAXIMUM 96** Watts.

- Use with WiZ app which allows control from any mobile device. Works with Google Assistant, Amazon Alexa, Siri Shortcuts, IFTTT, and SmartThings.

- This product must be used in conjunction with optional smart dimming & controls (sold separately) CWW-TW-SCENE-WH or CWR-TW-SCENE-WH.

IMPORTANT SAFETY INSTRUCTIONS

- Do not install this power supply in a wet location.

- To reduce the risk of the system overheating and possibly causing a fire, make sure all the connections are tight.

- Do not install *LED fixture closer than 3" or as specified in the *LED fixture installation instructions to curtains or similarly combustible materials. Keep insulation at least 3" away from the enclosure.

- Turn the electrical power off before modifying the lighting system in any way.

- The system is "ETL" listed for USA and Canada only when all the products used are supplied by PureEdge Lighting.

*See LED fixture installation instructions for proper placement.

Section One: Install the Power Supply

A

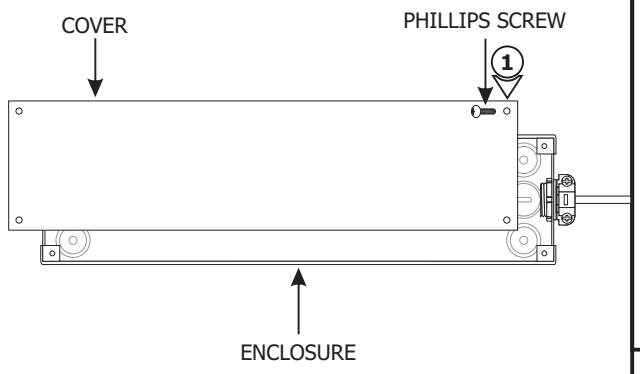

NOTE: Before beginning, download the "WiZ Connected" app from either Google Play or the Apple App Store.

GET IT ON Google Play | Available on the App Store

NOTE: Scan the QR Code for a Quick Start Guide and additional support for the WiZ app or visit: www.pureedgelighting.com/download/pdf/WiZ_Support_and_System_Training_Material.pdf

1: Remove the four Phillips screws to slide the cover off of the enclosure.

B

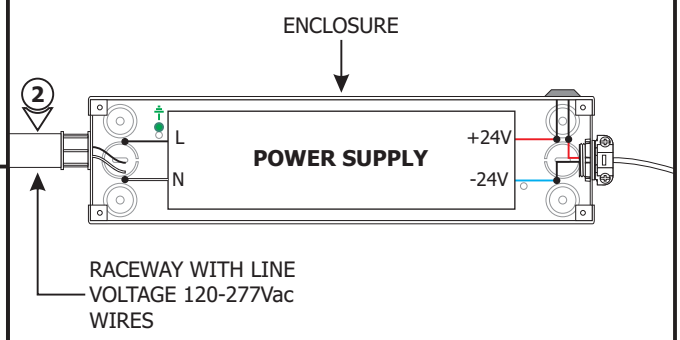

2: Install raceway from the main panel (line voltage) to the power supply enclosure. Run the line voltage wires to the enclosure.

3: **DO NOT** connect the power wires to the panel at this time.

4: Ground the power supply enclosure in accordance with local electrical codes.

C

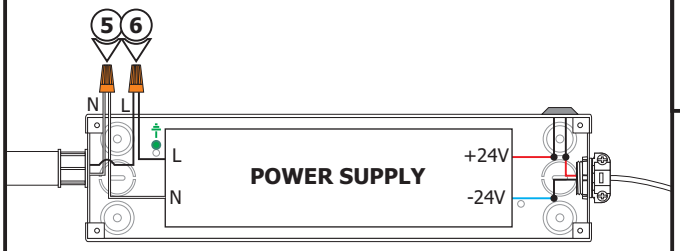

5: Connect the white neutral wire from the power supply to the line voltage neutral wire using a wire nut.

6: Connect the black line wire from the power supply to the line voltage line wire using a wire nut.

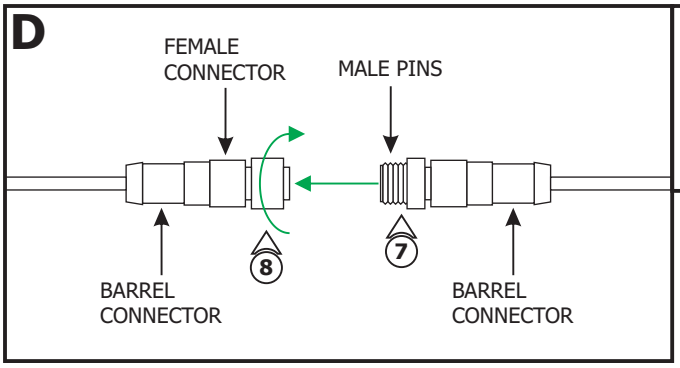

7: If not pre-installed, align the barrel connector coming from the power supply with the barrel connector from the Bridgebox Junction Box and push into place, ensuring that the female connector and male pins mate properly.

8: Twist the connector nut to lock in place.

Section Two: Install the Bridgebox Junction Box

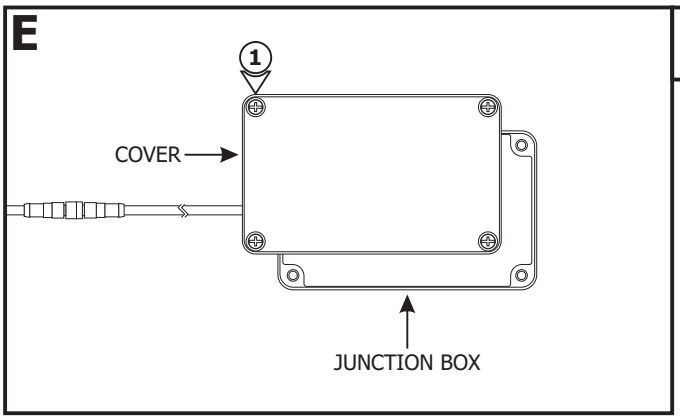

1: Remove the four screws on the Junction Box to remove the cover.

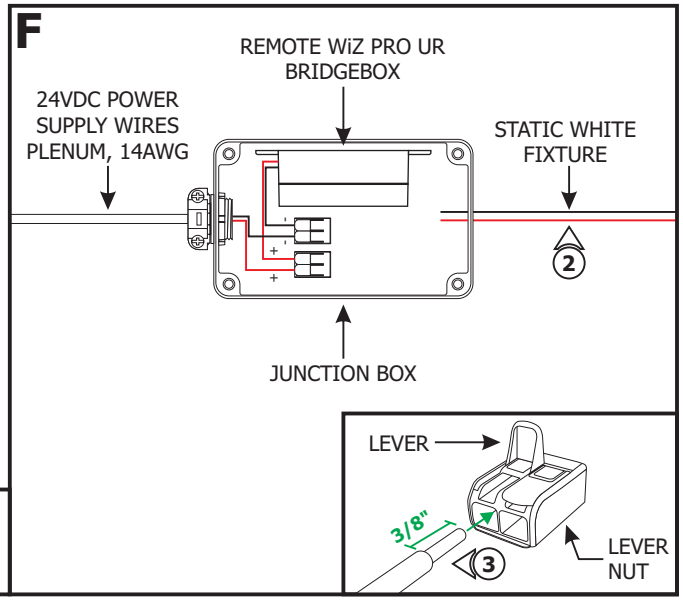

2: Route the 24VDC wires from the fixture to the Junction Box.

3: Strip 3/8" off of the fixture wires.

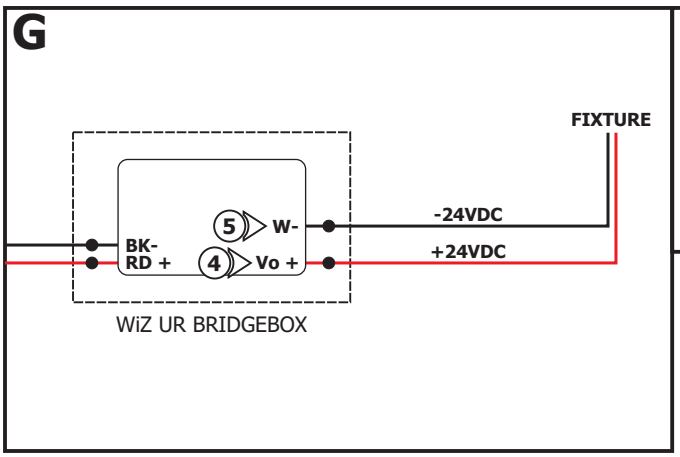

4: Connect the +24VDC fixture wire to the "Vo+" red wire of the bridgebox using a lever nut.

5: Connect the -24VDC fixture wire to the "W-" black wire of the bridgebox using a lever nut.

6: Lightly tug on the wires to ensure they are secured in place. Place all connections inside the Junction Box.

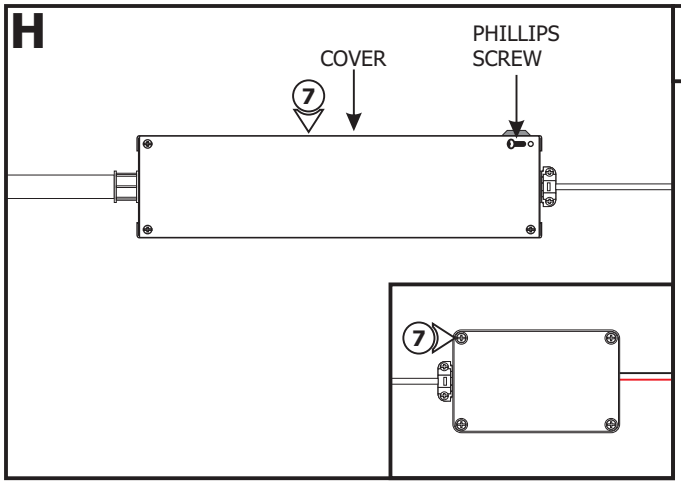

7: Replace the power supply cover and the Junction Box cover and secure it by tightening the Phillips screws.

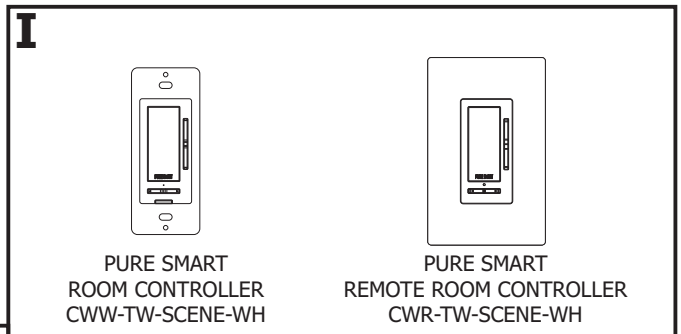

8: Refer to the instructions provided with the optional controller and the WiZ App for complete set up.

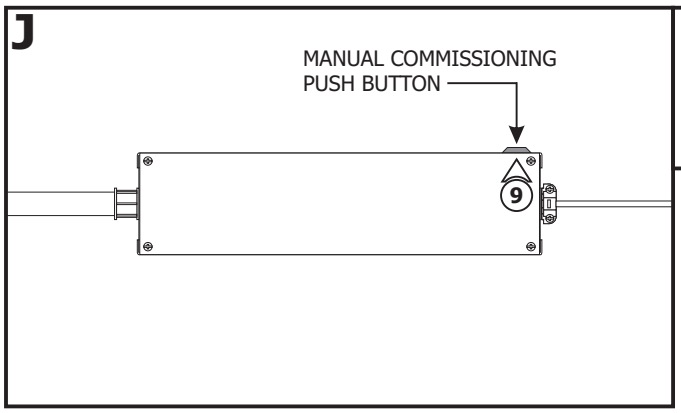

NOTE: The external push button allows for power cycling which triggers pairing mode to the connected smart device.

9: Use the manual commissioning button during pairing modes when prompted in the app.

96W, 24VDC LOW VOLTAGE WIRE SIZE CHART					
3% VOLTAGE DROP	**WIRE LENGTH IN FT**	**UP TO 33FT**	**34FT - 52FT**	**53FT - 86FT**	**87FT - 130FT**
	WIRE SIZE	14 AWG	12 AWG	10 AWG	8 AWG
	VOLTAGE AT END OF THE WIRE	23.28 VDC	23.29 VDC	23.28 VDC	23.28 VDC

General Wiring Diagram

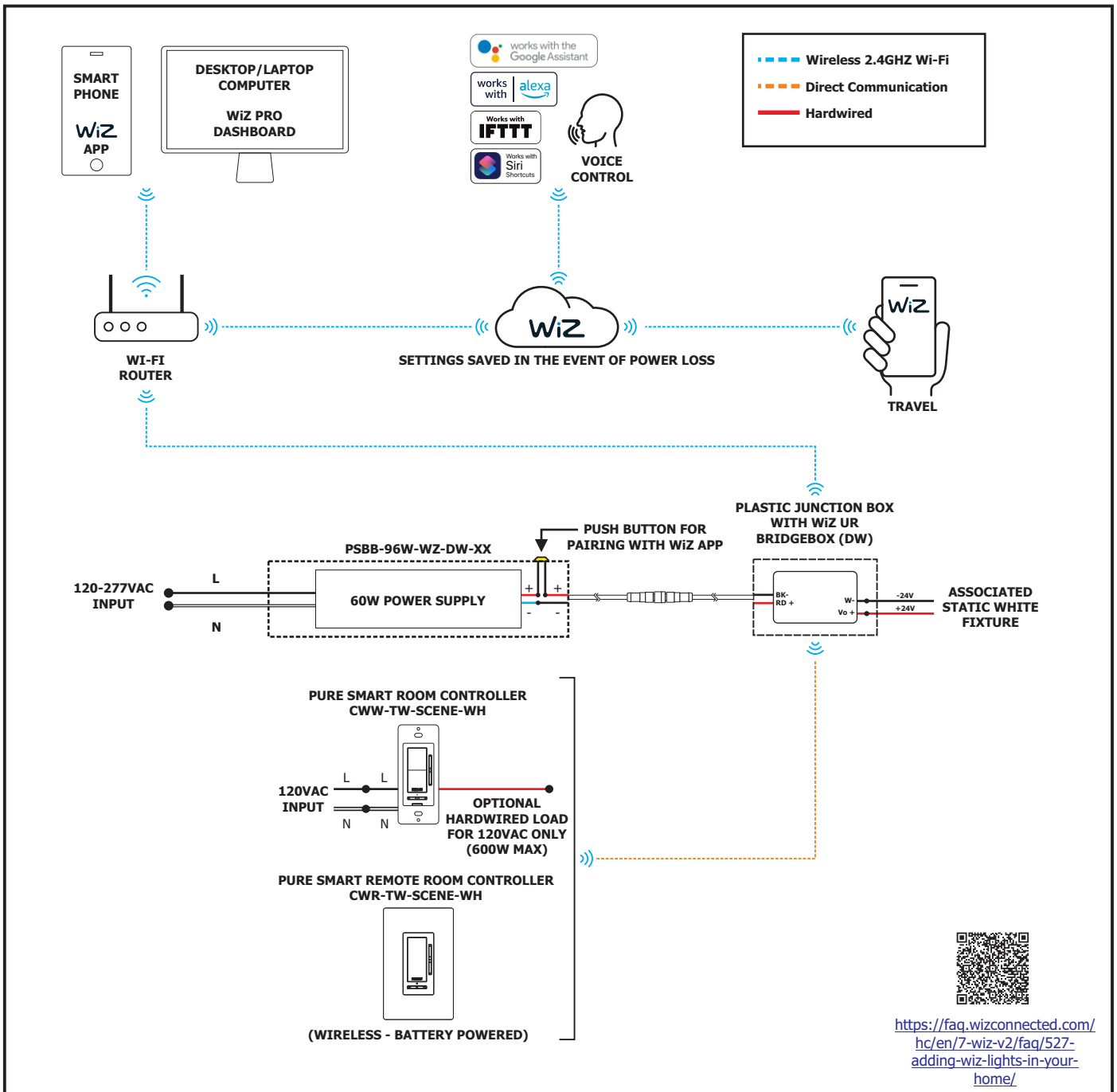

https://faq.wizconnected.com/hc/en/7-wiz-v2/faq/527-adding-wiz-lights-in-your-home/

If you have any questions, please contact WiZ Support at
Toll Free Number: **1-800-223-9477 - WiZ Pro [B2B]: Press 2 and then press 2 (Pro Installer support only)**
Web: https://faq.wizconnected.com/hc/en/7-wiz-v2/